ONESPORT

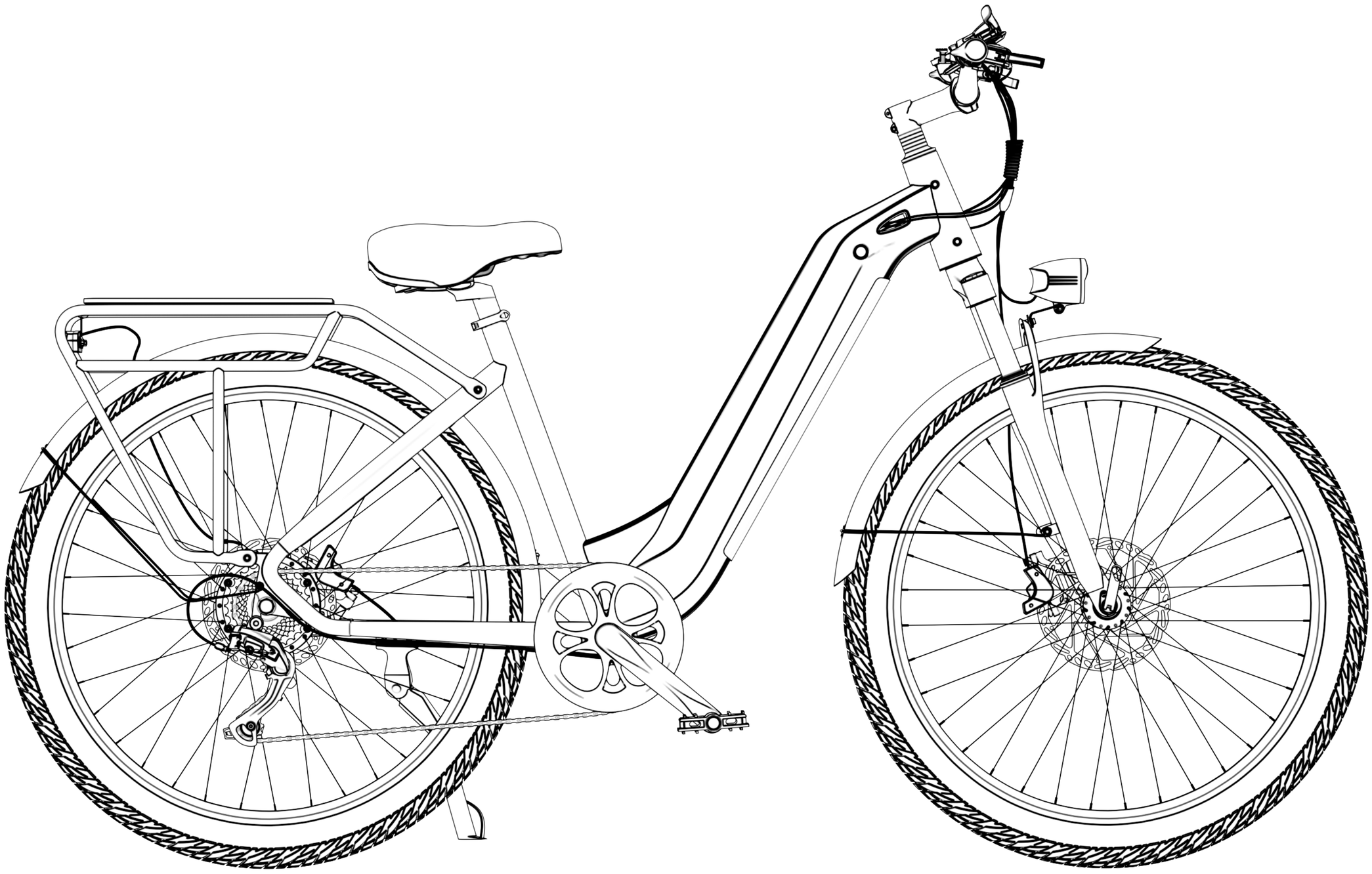

USER MANUAL

Attention!

Please keep the instruction manual properly!

To ensure your safety, please read the instruction manual carefully before using the electric bicycle to better understand the performance of the electric bicycle.

THANK YOU FOR CHOOSING ONESPORT

Contact us if you experience issues relating to riding, maintenance, and safety, or errors/faults with your Electric Bicycle.

: support@onesportglobal.com

: @onesportebike

: @Onesport

: @onesport__ebike

: www.onesportglobal.com/

TABLE OF CONTENTS

TABLE OF CONTENTS ---------- 01
WARNING ---------- 02
UNBOXING ---------- 03
WHAT'S IN THE BOX ---------- 03
FRAME NUMBER AND MOTOR NUMBER ---------- 04
STRUCTURE INTRODUCTION ---------- 05
INSTALLATION OF IN TEGRAL BODY ---------- 06
REMOVE THE BATTERY ---------- 07
INSTALL THE BATTERY ---------- 07
HOW TO CHARGE ---------- 08
INSTRUMENT INTRODUCTION ---------- 10
ON/OFF LCD DISPLAY ---------- 11
OPERATING THE LCD DISPLAY ---------- 12
DISPLAY SETTING ---------- 13
SAFETY NOTES ---------- 14
OPERATING SAFETY ---------- 14
HELMETS AND LOCAL LAWS ---------- 14
PRE-RIDE SAFETY CHECK AND INSPECTION ---------- 14
RIDING IN WET CONDITIONS ---------- 14
RIDING AT NIGHT ---------- 15
MAX WEIGHT ---------- 15
PRE-RIDE SAFETY CHECK ---------- 15
ERROR CODES ---------- 16
WARRANTY ---------- 17
ELECTRIC BIKE MAINTENANCE ---------- 18
REGULAR CLEANING ---------- 18
LUBRICATION ---------- 19
CHECK THE BOLTS ---------- 19
TIRE PRESSURE ---------- 19
BRAKE PADS ---------- 19
WATERPROOFING ---------- 19
BATTERY CARE ---------- 19
DISCLAIMER ---------- 20

WARNING!

Read this entire manual before assembling or using your new electric bike. Do not modify, disassemble, or replace the original electrical components on your bike. Doing so will invalidate your warranty and could put you in danger. Riding any type of bike comes with some risks which can't be predicted or avoided. Taking proper care of bike components can lower the risk of sudden failure of components but cannot prevent it. These sudden failures could cause serious harm, injury, or death to the rider. If you notice abnormalities in any component on the bike, take it to a licensed mechanic to be repaired or replaced immediately.

ONESPORT assumes no liability for harm, injury, or death of the rider. This manual is not intended to function as a detailed service manual.

ONESPORT recommends having your local bike shop mechanic perform a detailed safety check of your bike before your first ride. Ensure your local mechanic is experienced and reputable. The ONESPORT electric bicycle can withstand most rain showers without sustaining damage.
The bike has an IP rating of 65. This means it is dust tight and can withstand jetting water.
See the IP code for more details.
It does not mean that the bike and its mechanical and electrical components are waterproof.
We do not recommend storing or using the bike in excessively wet conditions. The warranty for the ONESPORT does not cover water damage.

UNBOXING

Congratulations on your purchase of a new ONESPORT electric bicycle! Your bike and related accessories are inside your box, and the instructions below are meant to show you all the parts inside the box. Before removing the packing foam, please take out all the parts to confirm if there are any missing parts.

If any parts are missing or damaged, please contact ONESPORT customer service support@onesportglobal.com as soon as possible.

⚠️ Note: If this is your first time riding or the first time you assemble an e-bike! we recommend you seek professional help, preferably from a local, certified bike mechanic.

WHAT'S IN THE BOX:

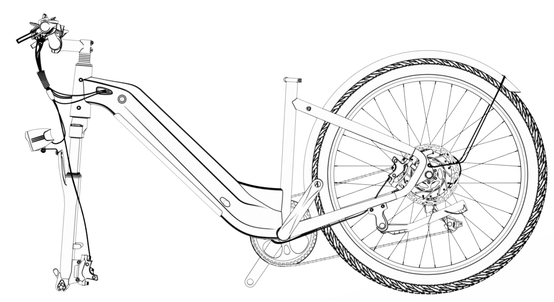

Electric Bicycle

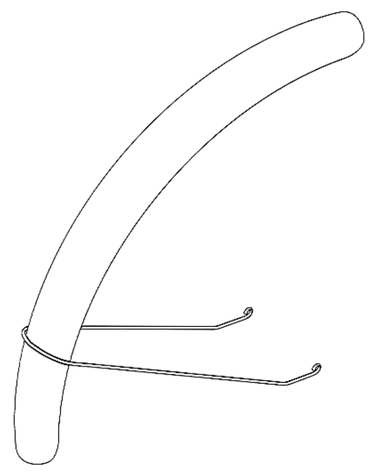

Front fender

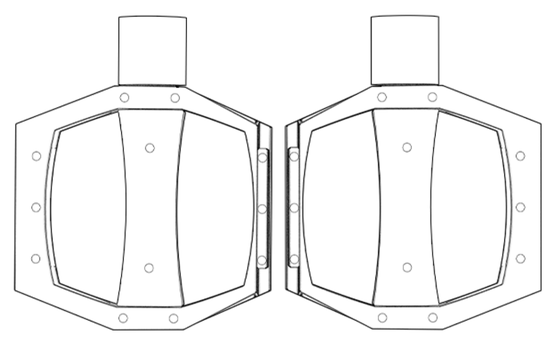

Pedals

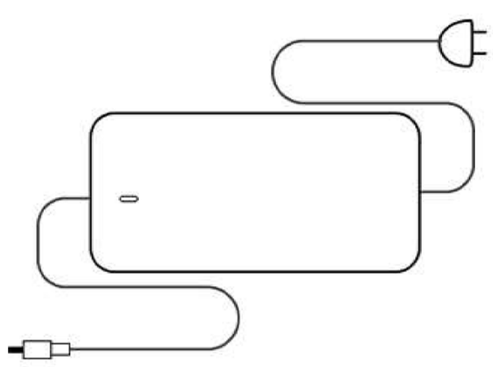

Charger

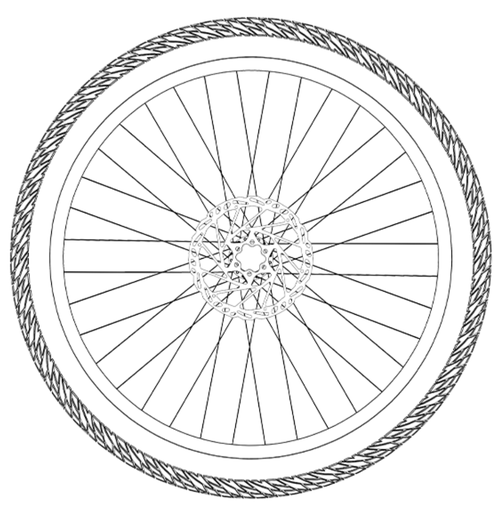

Front wheel

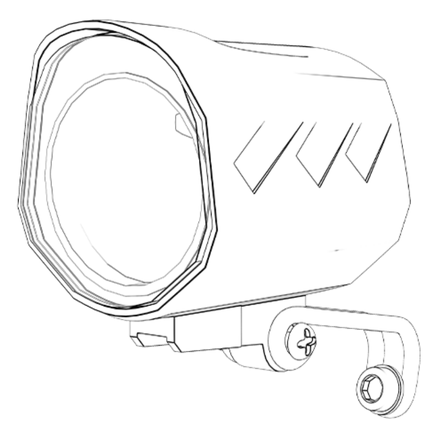

Headlight

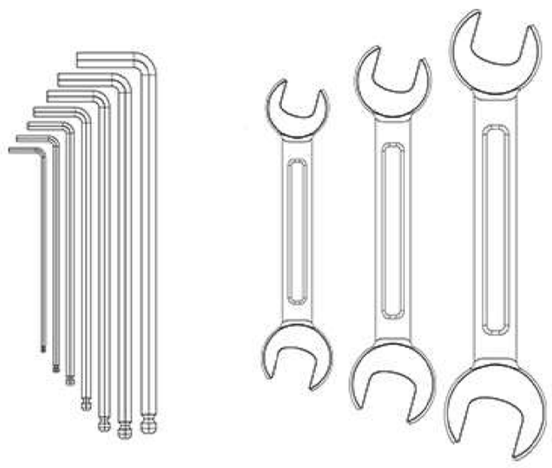

Tools

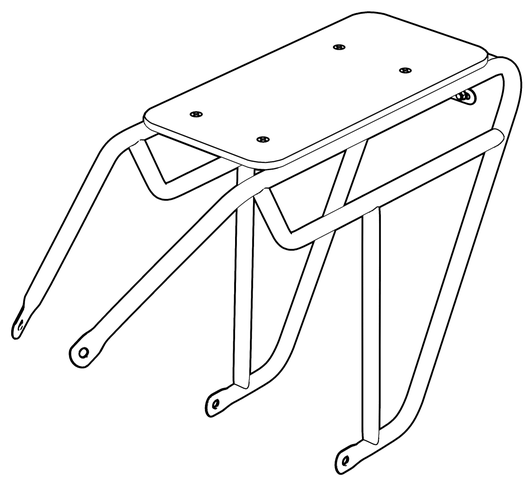

Goods shelves

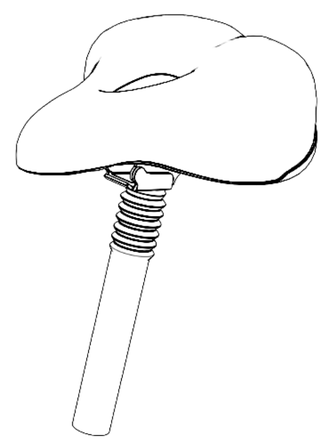

Seat

FRAME NUMBER AND MOTOR NUMBER

Your bike has two unique serial numbers on the frame and on the motor.
As shown in the picture.

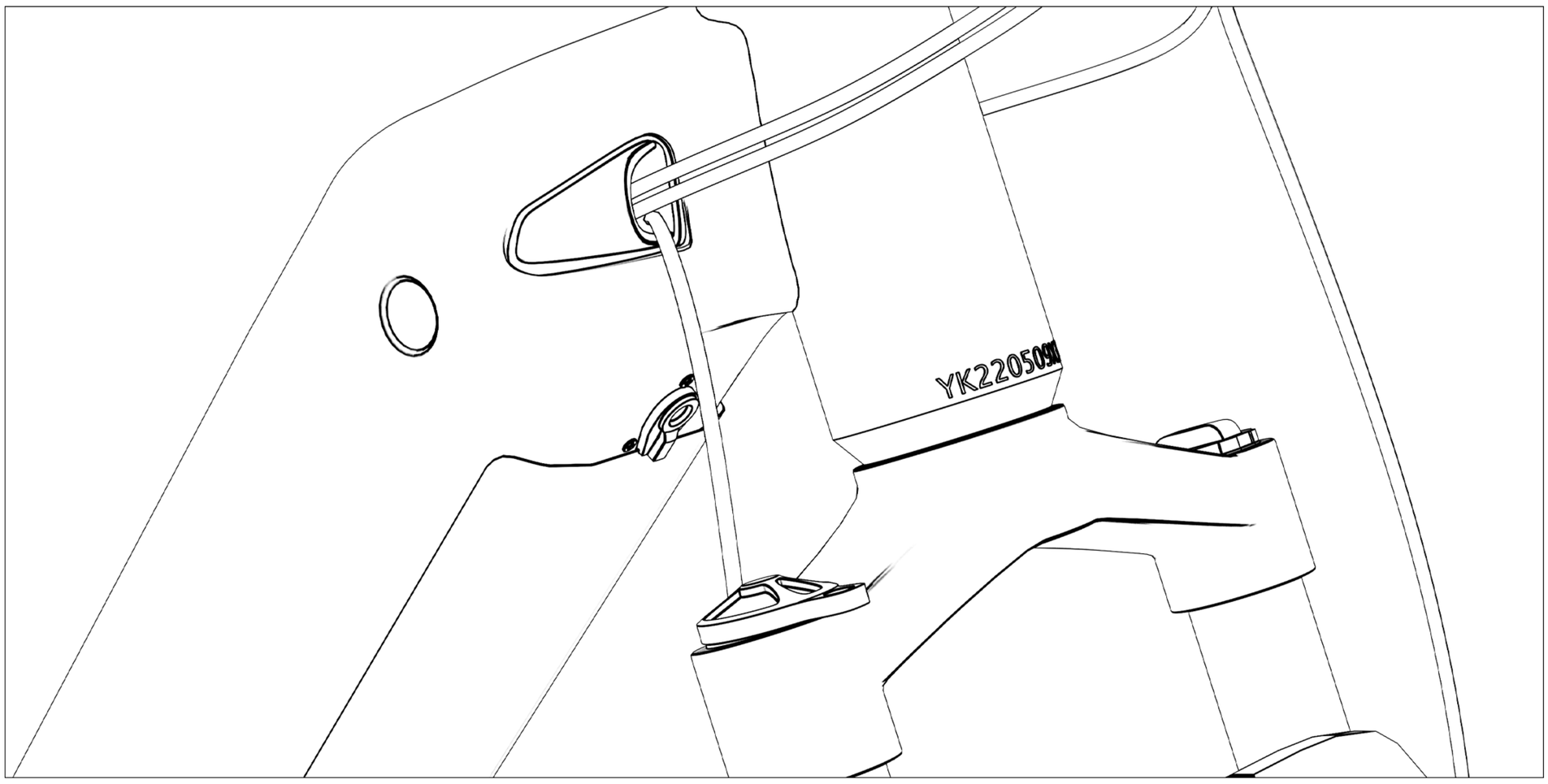

Please find the serial numbers stamped on your bike and keep records yourself.
The motor number and frame number will be the proof of purchase for ONESPORT to honor the warranty.
Also, if an electric bike is stolen, you can provide the frame number for law enforcement.

STRUCTURE INTRODUCTION

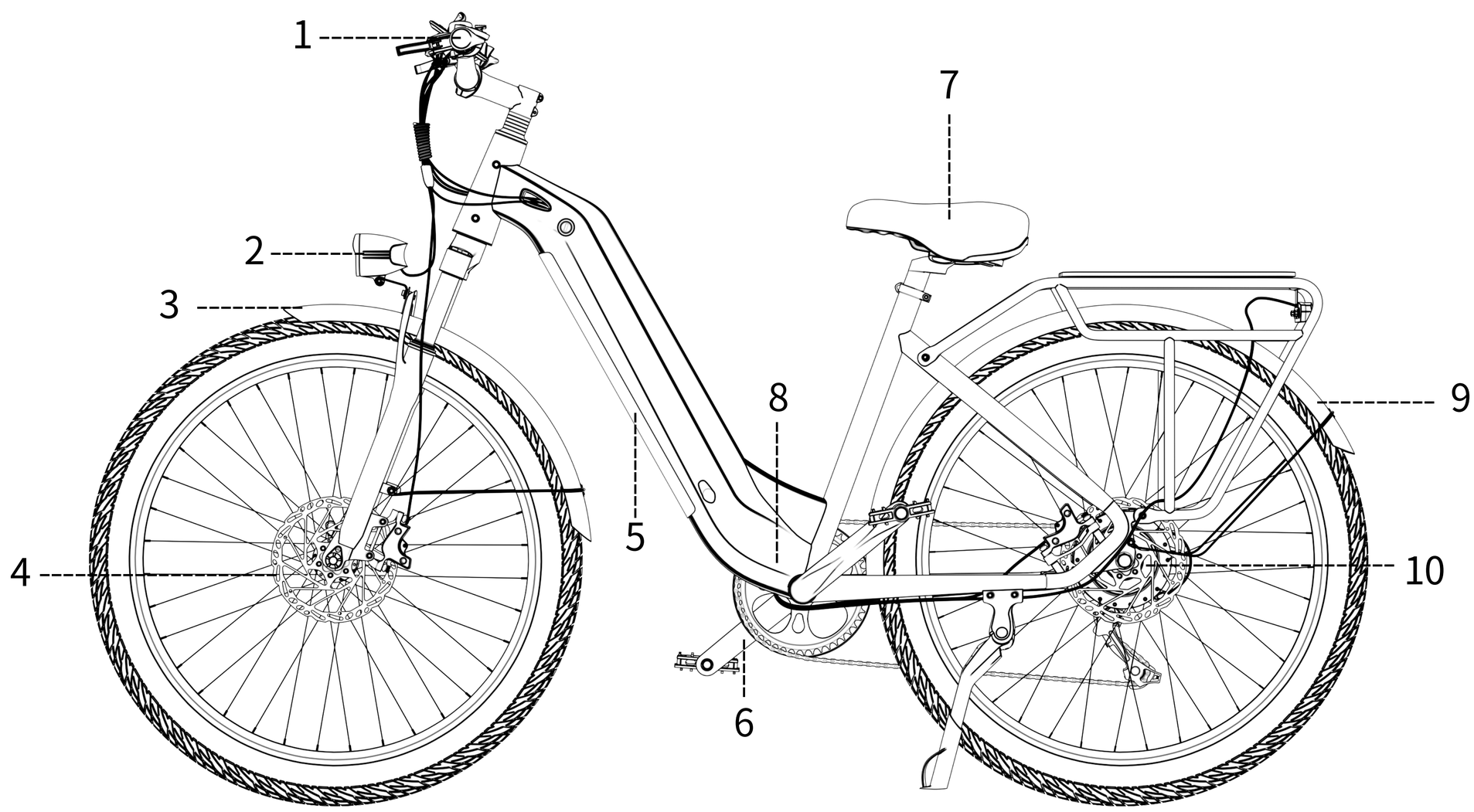

1. Handlebar
2. Headlight
3. Front fender
4. Brake disc
5. Battery
6. Crank Shaft
7. E-bike Seat
8. Controller box
9. Rear fender
10. Motor

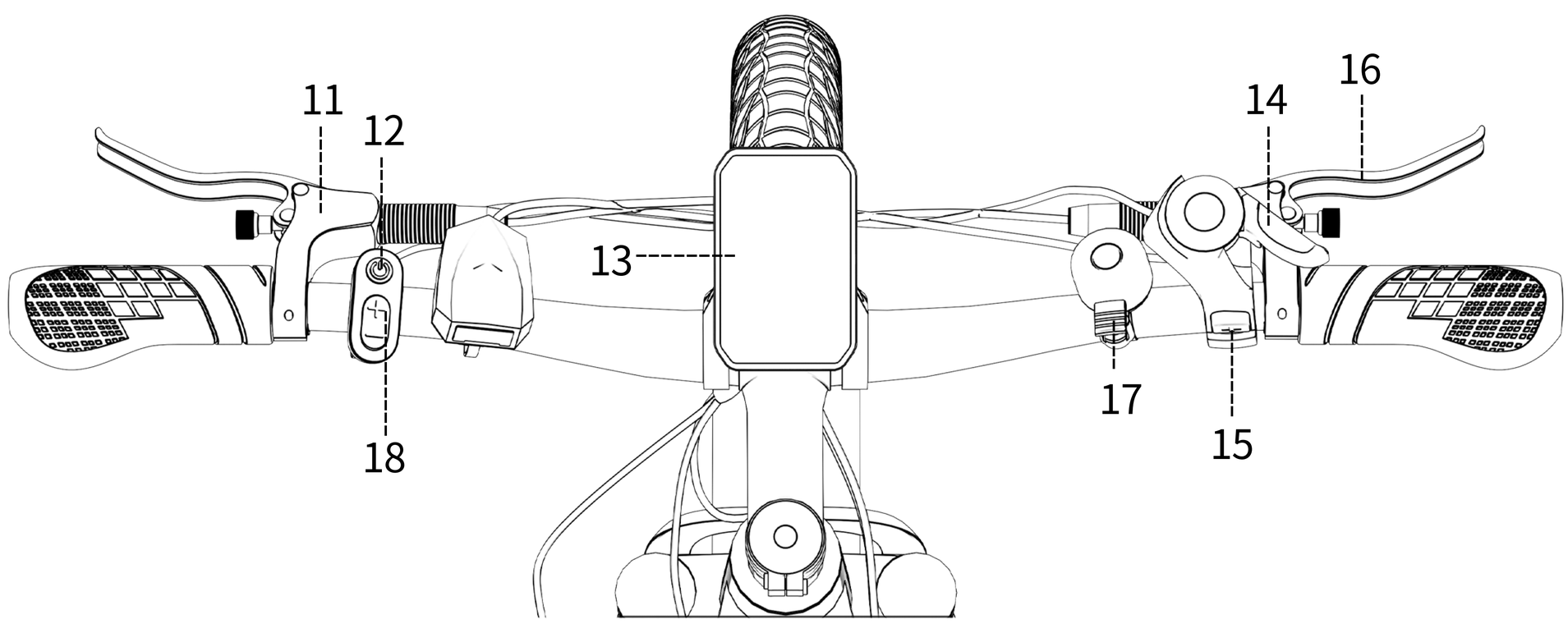

11. Front brake lever
12. On/Off button
13. Display
14. Downshifting button
15. Upshifting button
16. Rear brake lever
17. Horn button
18. Light switch

INSTALLATION OF INTEGRAL BODY

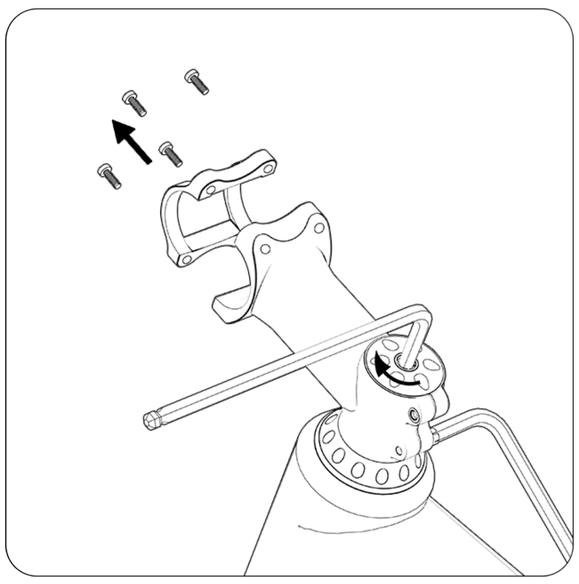

1. Adjust the Stem to the front and lock the screws with an Allen key. Use an Allen key to remove 4 bolts.

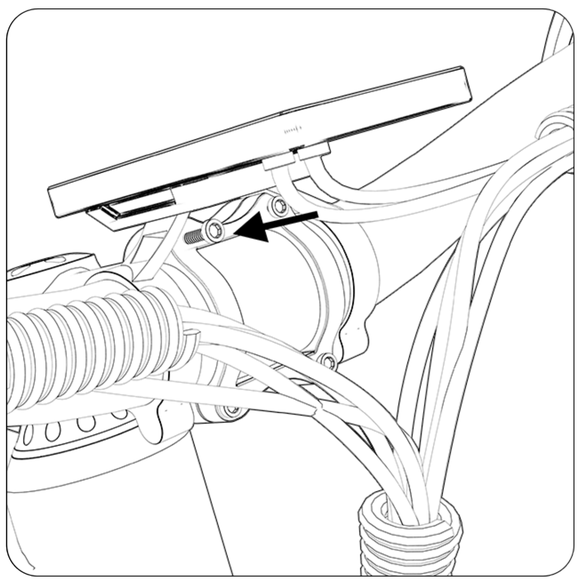

2. Attach the handlebar to the stem connection, and thread in the bolts.

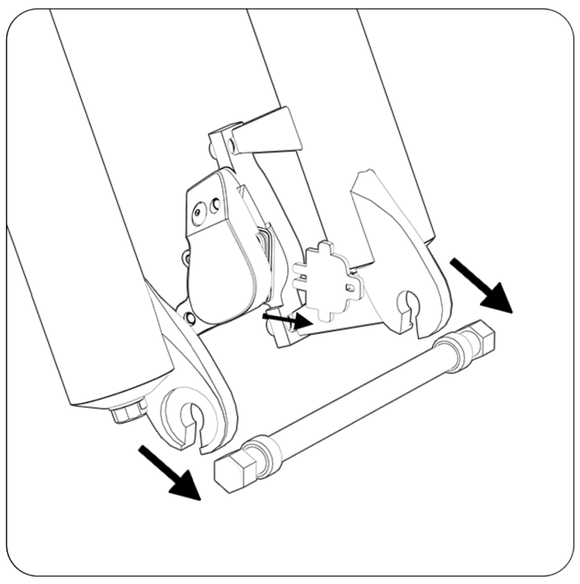

3. Remove the front fork protective rod and brake protective pad.

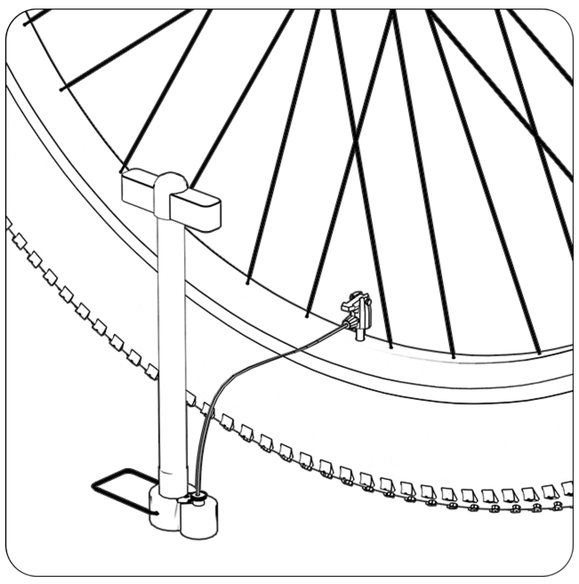

4. Inflate the front wheel slowly to prevent the tire from bulging out on both sides.

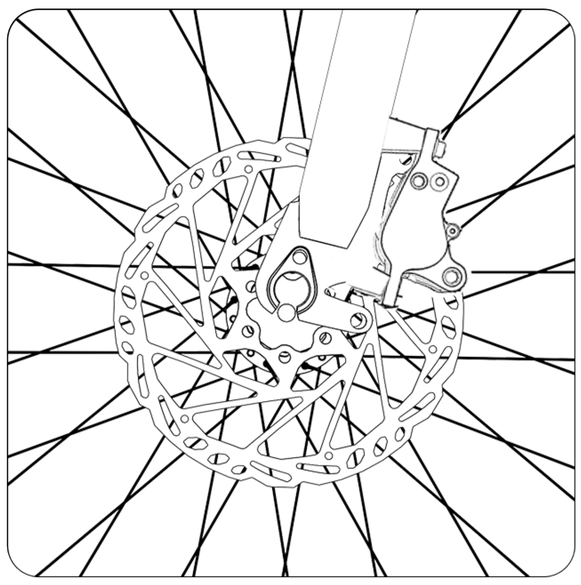

5. Front insertion aligns with the tire axis during installation

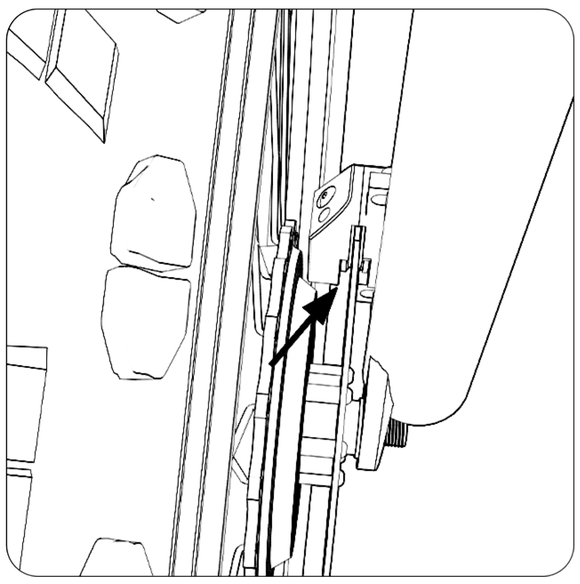

6. Note: Align the disc with the brake.

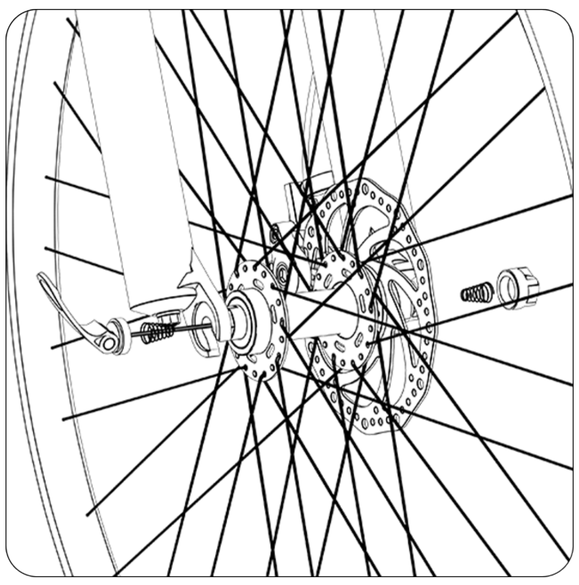

7. As shown in the picture, install the quick release shaft.

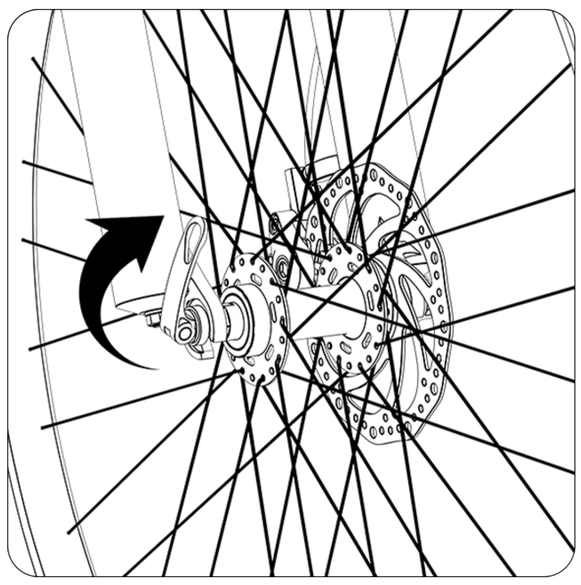

8. Tighten the bolt and fasten the long side.

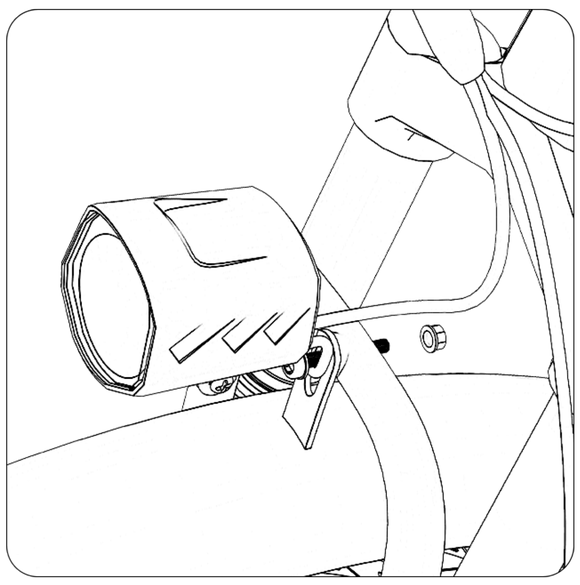

9. Install the front lights and front fenders.

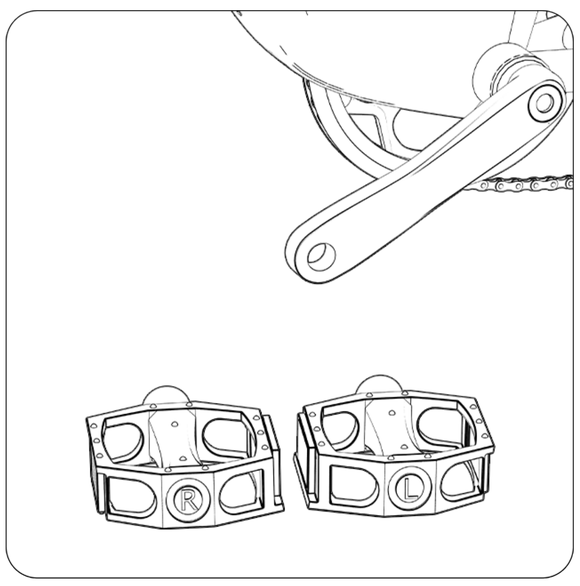

10. When installing the foot pedal, pay attention to distinguishing between ''R'' and ''L''.

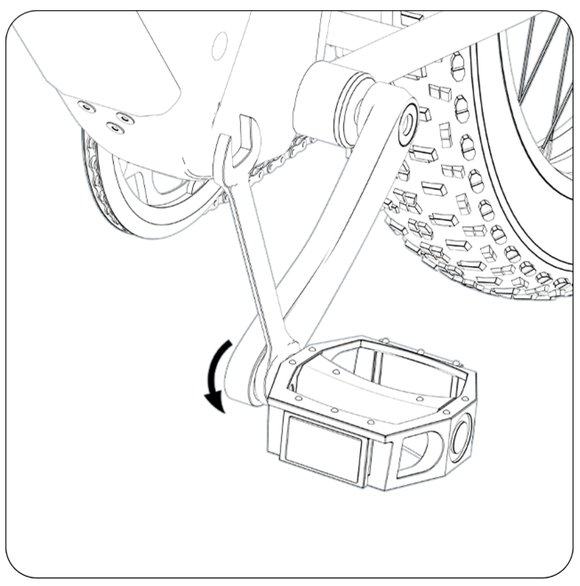

11. Use a wrench to tighten the pedal.

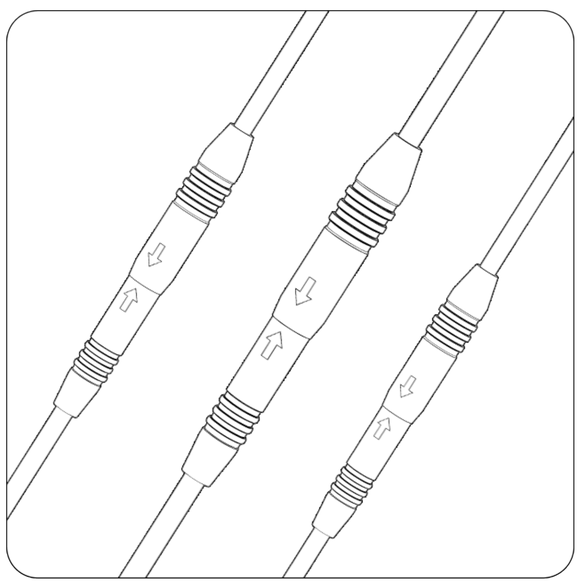

12. Connecting motor cable, headlight cable, and mobile phone bracket cable.

REMOVE THE BATTERY

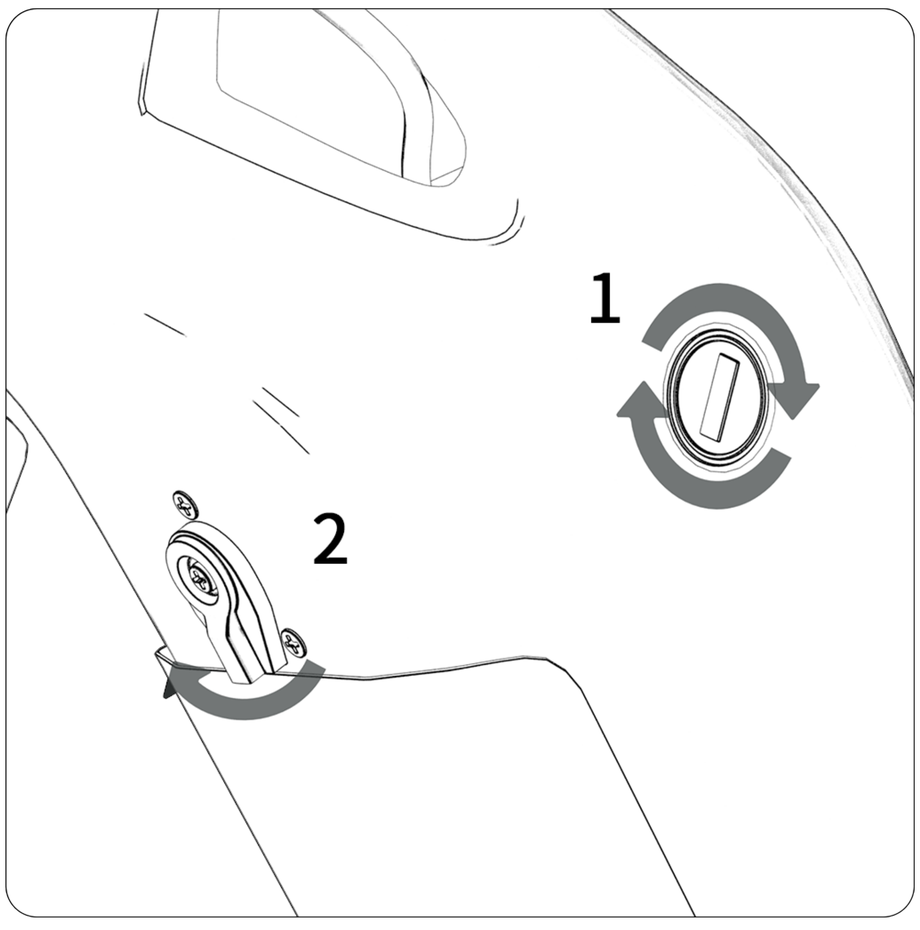

1. Unlock the battery with the key

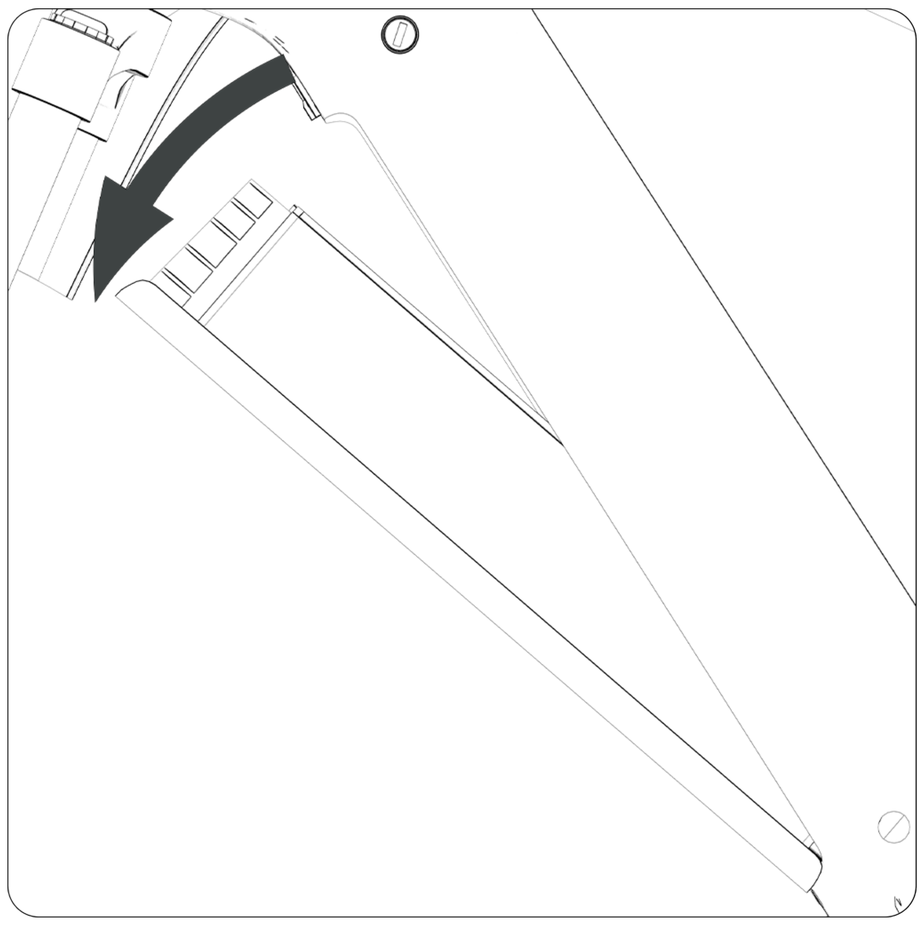

2. Lift the battery

INSTALL THE BATTERY

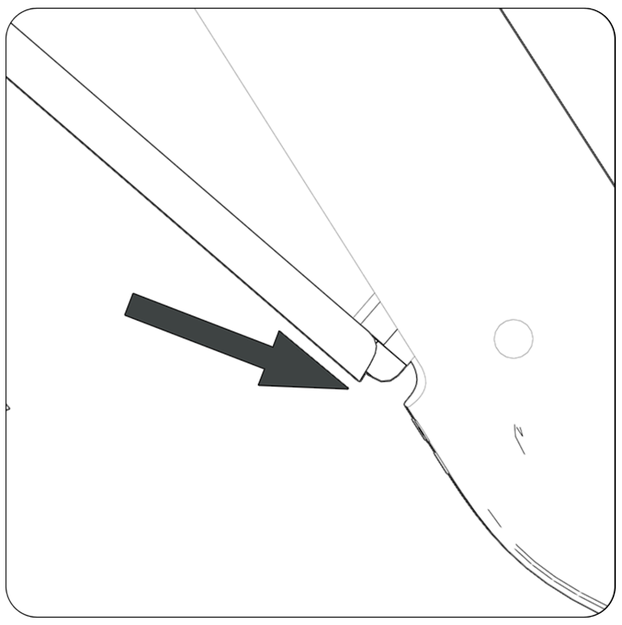

1. Install the battery with the contact side down.

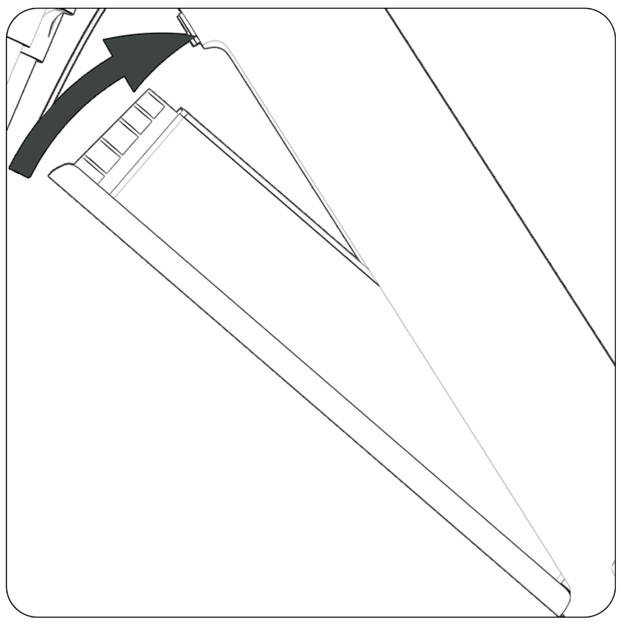

2. Connect the battery socket to the pin and push it up.

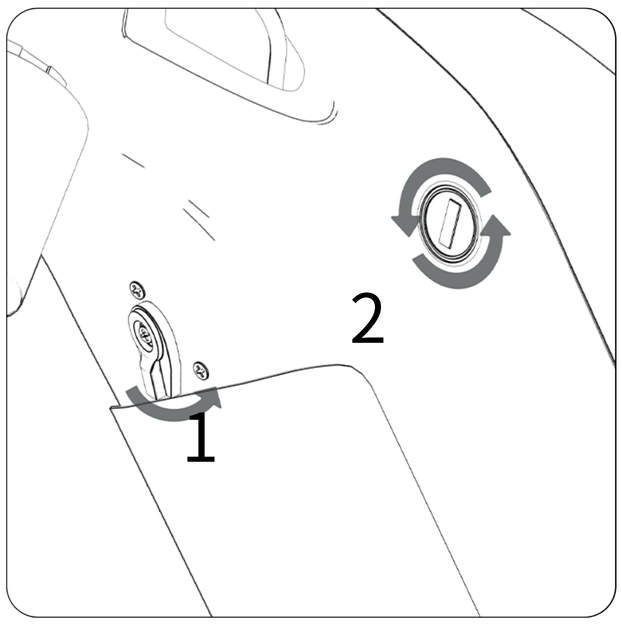

3. Twist the buckle to prevent it from falling. Turning the key to the "lock" position.

HOW TO CHARGE

ONESPORT provides you with both whole bike charging and external battery charging for your convenience to choose.

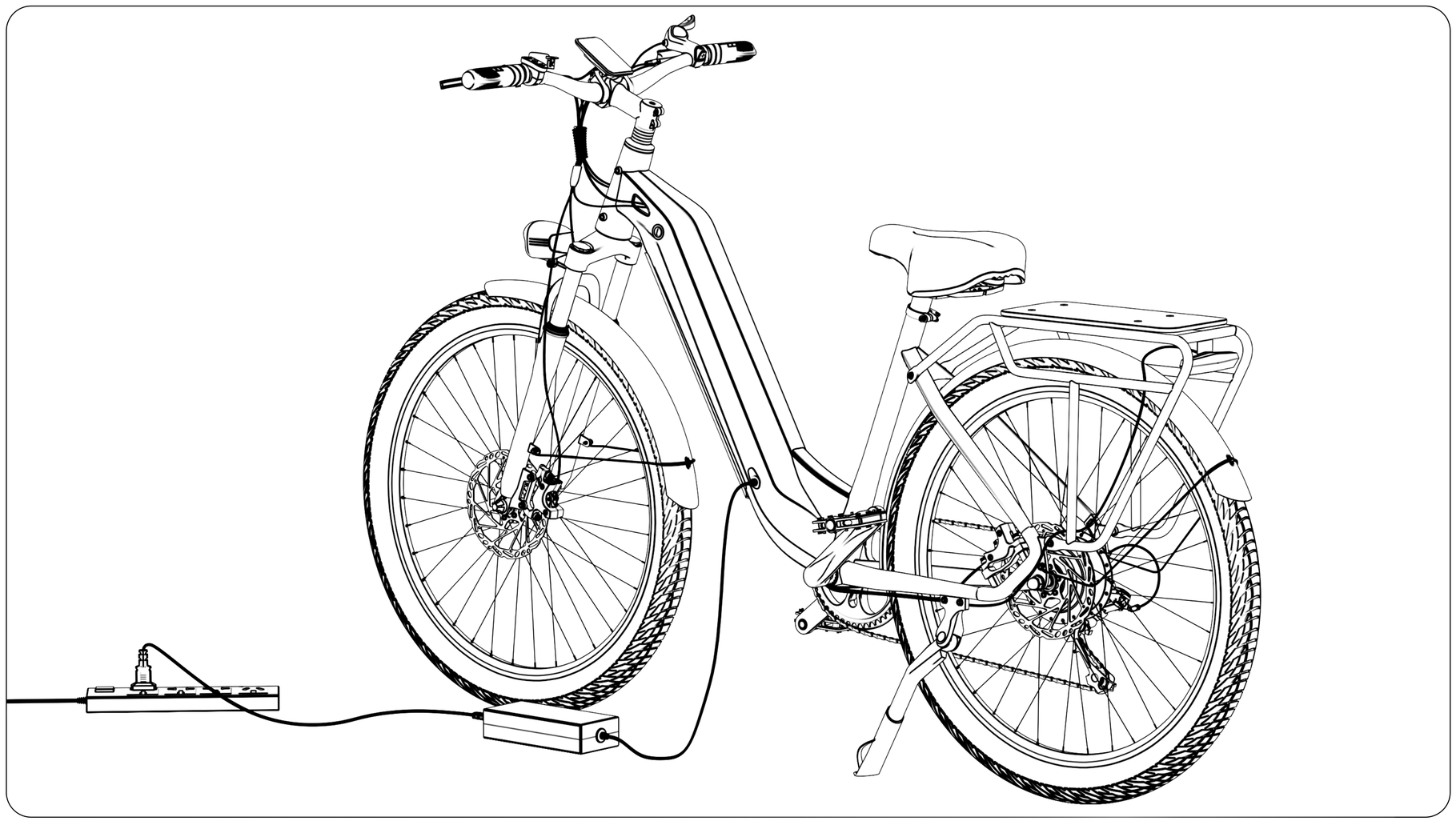

Whole bike charging mode:

You can plug the charging plug into the body charging port and charge the E-Bike directly.

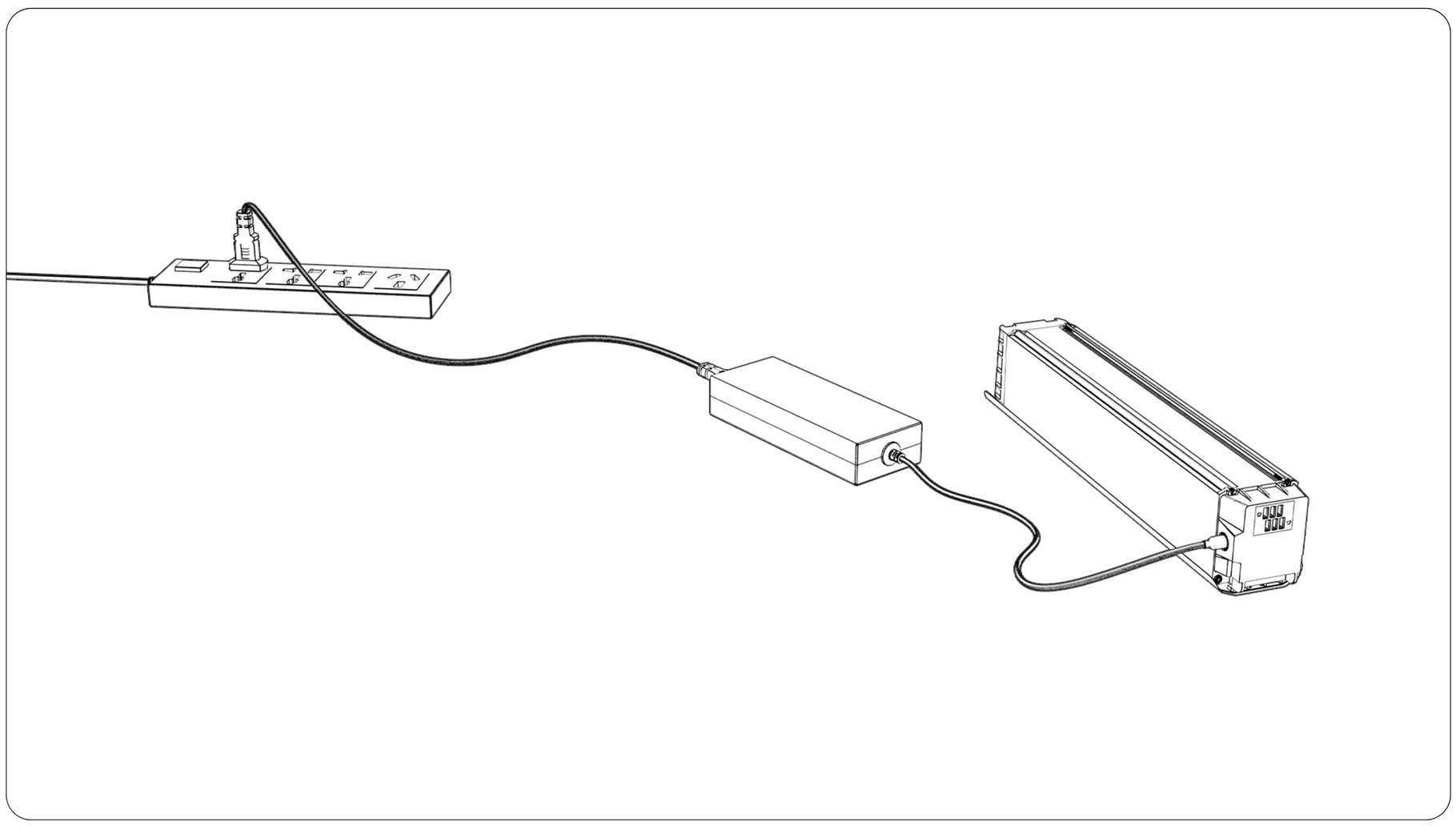

External charging mode:

Remove the battery and you can plug the charging plug into the battery charging port for external charging.

CHARGING SAFETY

- Do not use a charger other than ONESPORT to charge the E-Bike.
- When you receive the E-Bike, please charge the battery for the first time in time to ensure that the battery is fully charged when you ride it for the first time.
- Do not leave the battery unattended while charging.
- Avoid charging the battery at too high a temperature.
- Make sure there are no flammable objects around when charging.

Battery Safety:

- ⊘ If you find the battery is damaged, leaking, discolored, etc., please do not charge the battery.
- ⊘ When storing the battery, be sure to keep it away from heat sources and avoid direct sunlight.
- ⊘ Do not immerse the battery in any liquid.
- ⊘ Do not force the battery to remove, follow the instruction manual for the removal of the battery.
- ⊘ Battery charging time may increase depending on the time of use.
- ⊘ If the battery fails to charge, stop charging immediately.

Caution:

Be careful when charging, misuse will lead to property damage and personal injury. When your batteries are no longer in use, dispose of your batteries according to your local state regulations. Disposal regulations for lithium batteries vary from state to state, so it is important to know your local government's regulations. Lithium batteries should not be placed with regular trash.

INSTRUMENT INTRODUCTION

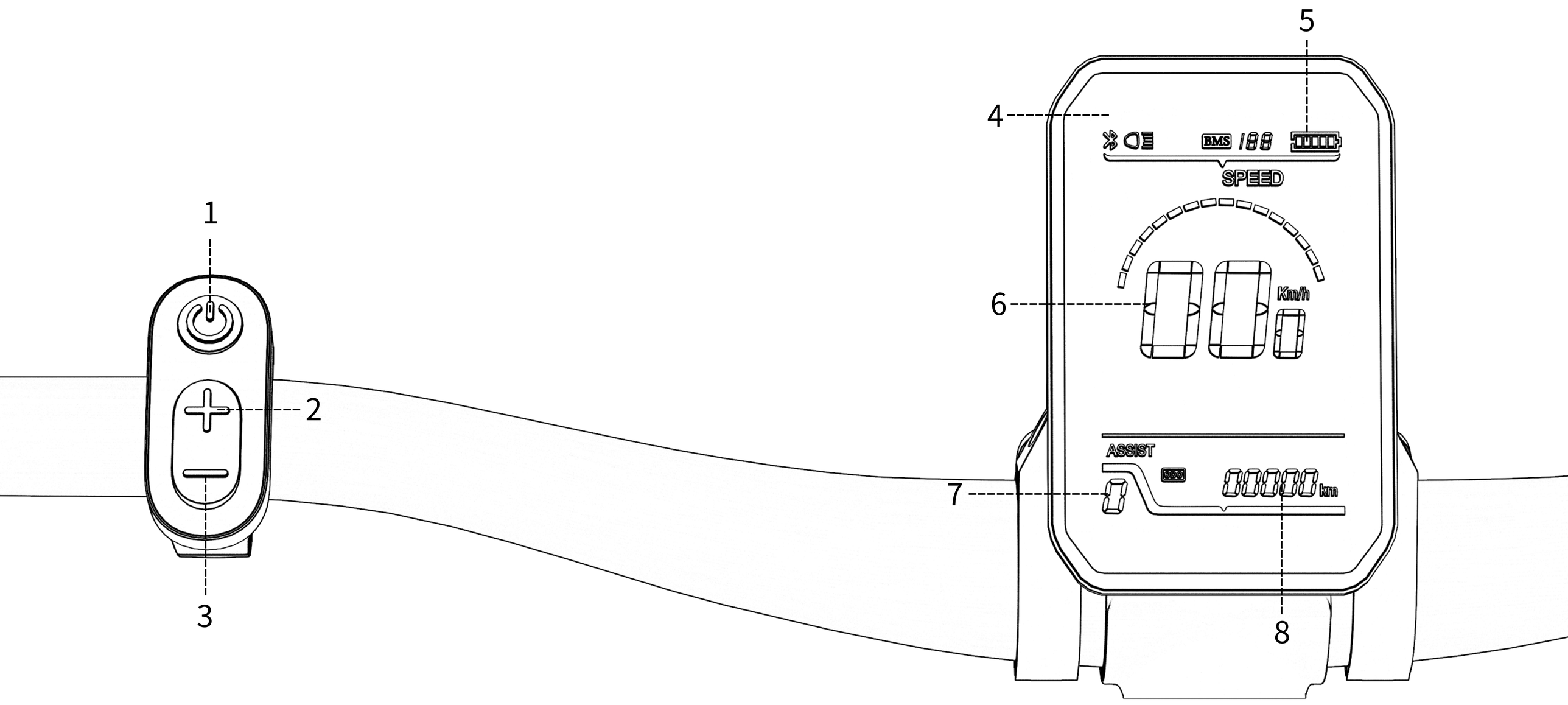

1. Switch on/off the Long button for 3 seconds to start
2. Increase gear
3. Decreasing gear
4. Multifunctional display area
5. Capacity display
6. Speed display
7. Gear display
8. Total driving distance

Caution:

The meter tries to avoid unnecessary knocks.

Please do not modify the instrument parameters that are not explained in this manual, otherwise, it may not be able to ride properly.

ON/OFF LCD DISPLAY

Turn on the display

Press and hold the''⏻''button for more than 3 seconds, and the display and controller start to work.

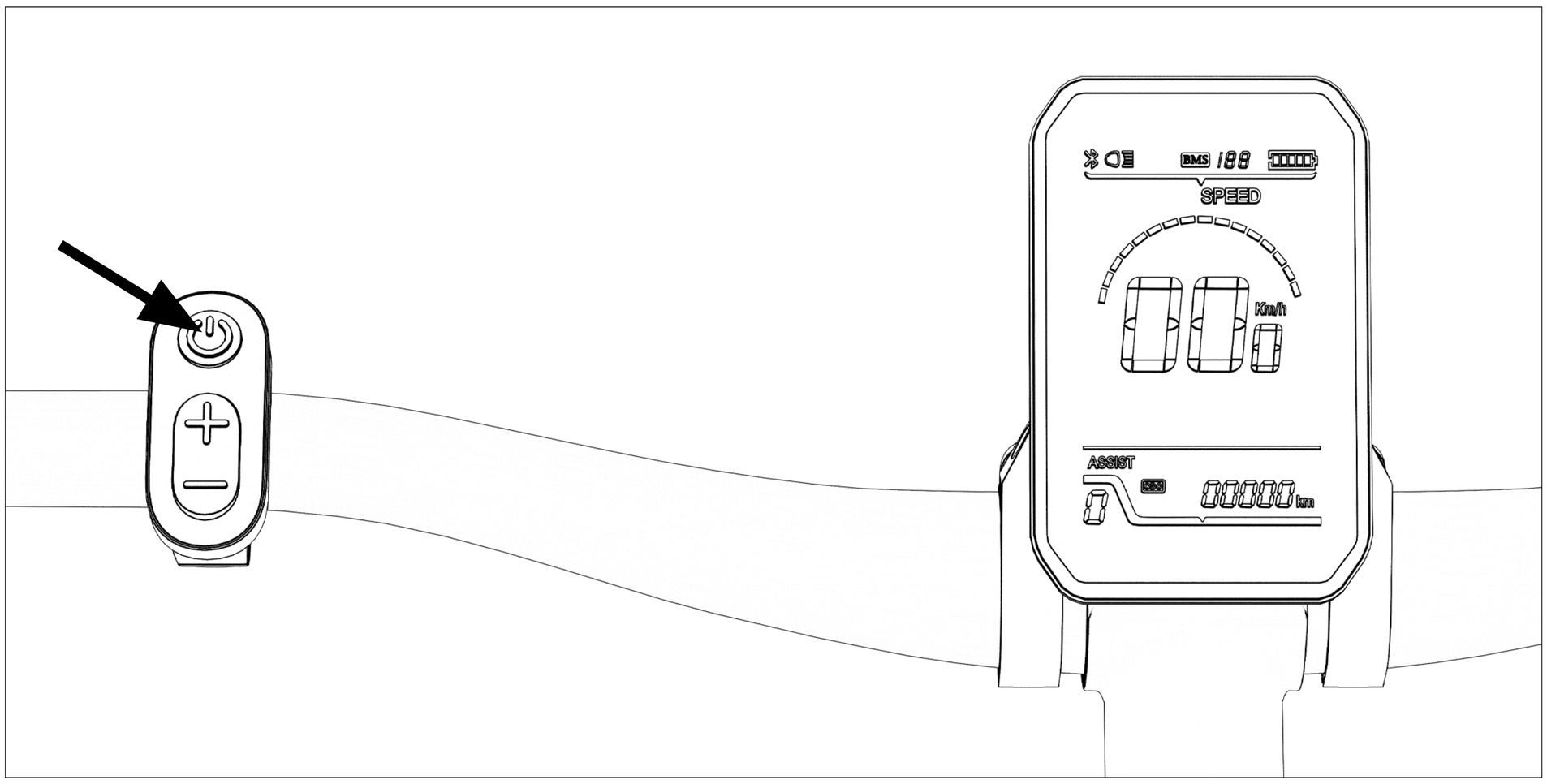

Turn off the Display and power off

Press and hold the''⏻''button for more than 3 seconds, and the display will be closed.

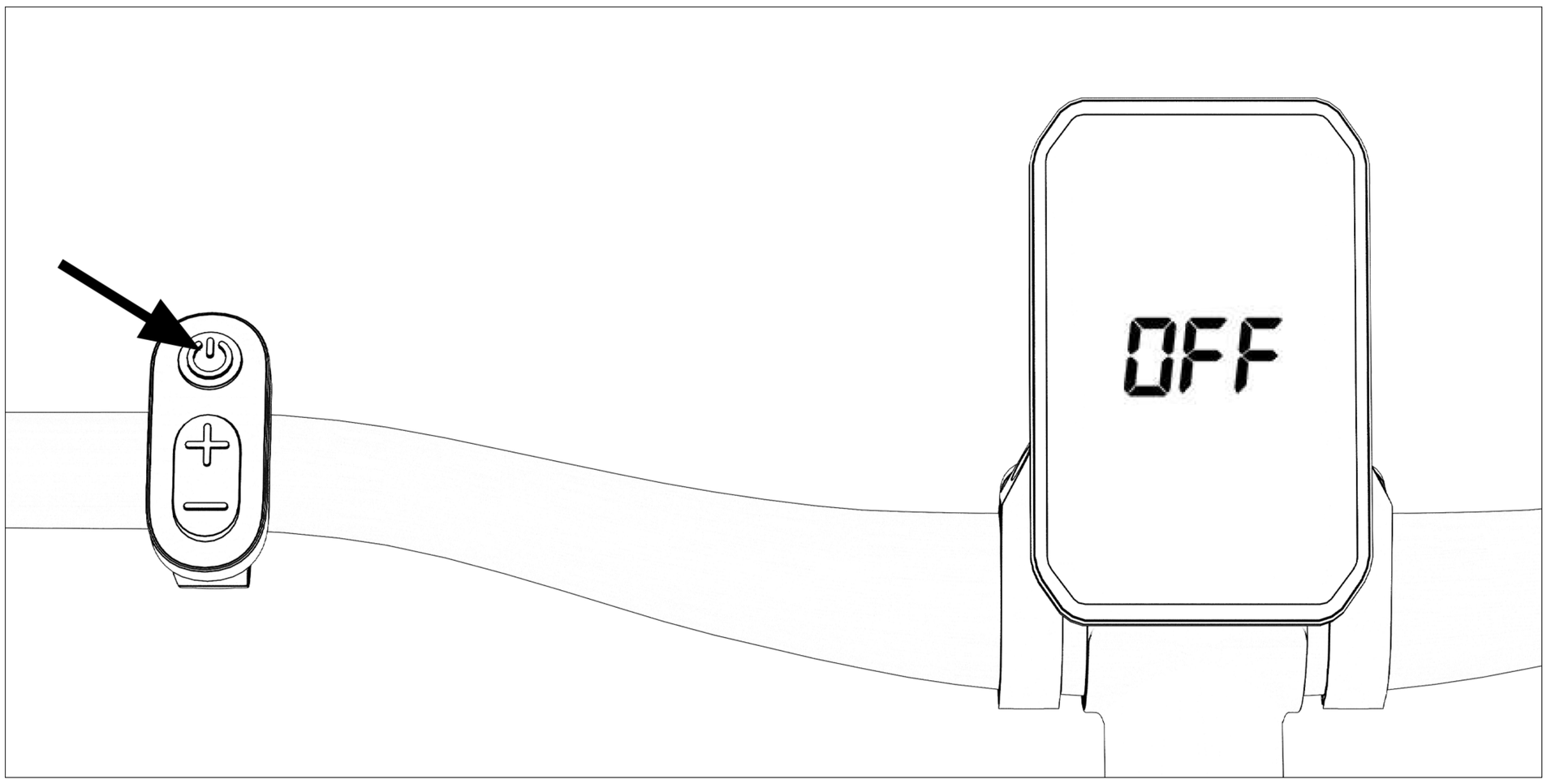

OPERATING THE LCD DISPLAY

Increase Pedal Assist Level	Short-Press the'' + ''button.
Decrease Pedal Assist Level	Short-Press the'' - ''button.
Toggle Speed, Odometer, TRIP, Trip Timer, VOL, Average Speed Max Speed.	Press and let go of the''⏻''button.
Turn on headlights	Long press the '' + ''to turn on the front lights.

Caution:

The trip meter will reset when the bike is powered off. The maximum and average speed will be calculated for a given trip and will reset when the bike is powered off. When the bike has not been used for 10 consecutive minutes, the display will automatically shut down, The pedal assist and features will no longer work when the display is turned off.

DISPLAY SETTING

To change display settings, hold the + and − button simultaneously to enter into the advanced settings menu. In this menu, clicking the''⏻''button will toggle between each numbered setting.
To adjust the value of each setting, click the + and − buttons accordingly.

Setting	Function	Default	Explanation
P01	Brightness	2	Backlight display brightness. The darkest level is 1, and the brightest level is 3.
P02	Distance Units	1	0:KM 1:MILE
P04	Sleep time	0	LCD Display sleep timer. 0, no sleep; other numbers are sleep time, range: 1-60; unit minute.

OPERATING SAFETY

Before riding the bike for the first time, ensure that you have read and understood this manual. Make sure you understand how to turn on and activate the pedal assist and . When first riding the bike, take care to start slowly with a low level of pedal assist, Take your first ride in a safe area away from cars, other bikers, pedestrians, or other potentially dangerous obstacles. Only move up pedal assist levels when you feel comfortable and you have ample experience riding the bike. The higher pedal assist levels will accelerate you to higher speeds more quickly. Take care when riding the bike at any speed. Failure to adhere to warnings and guidelines in this manual can lead to serious harm, injury, or death. Damage sustained by the bike from failing to follow instructions, guidelines, and warnings in this manual is not covered under warranty. Do not lean on the bike when it is parked and the kickstand is in use.

HELMETS AND LOCAL LAWS

Always wear a helmet when riding your e-Bike. Ensure that the helmet fits your head and is securely tightened down. Before riding, read local law and comply with all rules relating to cycling and biking in your area. If you attach a seat for children to the bike, they must also be wearing properly fitted helmets at all times.

PRE-RIDE SAFETY CHECK AND INSPECTION

Before each ride, make sure to inspect your e-Bike to ensure there are no loose fasteners or accessories. Make sure to specifically check that both the front and rear axles are secure. Also, make sure both the handlebars and the handlebar stem are not loose. Check the tire pressure of both wheels before riding to ensure the tires are inflated to the recommended pressure printed on the side of the tire walls. Pull the brake levers to make sure your brakes are working properly and adjust if necessary. Ensure both your seat post and handlebar stem are inserted past their minimum insertion points as indicated by the markings on them.

RIDING IN WET CONDITIONS

This electric bicycle can withstand light rain and small splashes but is not designed to be subjected to inclement weather, extremely heavy showers, or submersion in water.
Note: Use caution when riding in wet conditions as it will take longer to use the brakes to slow down, and also when turning as the tires may slip. The electrical components on the bike are not waterproof. The entire bike has an IP rating of 65. Water damage is not covered under warranty.

RIDING AT NIGHT

Riding at night comes with more risks than riding during the day due to decreased visibility so riders are encouraged to exercise increased caution. Before riding at night, make sure that reflectors are installed on your e-Bike. For increased visibility, also ensure the front headlight and rear tail light are turned on and adjusted such that other people on the road can see them clearly. Riders should wear bright-colored clothing at night.

MAX WEIGHT

The bike can safely carry a total weight of 120 kg. Note range and top speed will be affected by the total weight being carried by the bike.

PRE-RIDE SAFETY CHECK

Ensure all components are properly secured before riding otherwise serious harm or death could occur. This includes but is not limited to pedals, handlebars, handlebar clamp, cranks, seat, and seat post clamp.

- Make sure you can't twist the seat or stem out of alignment by hand.
- Ensure all cables and connectors at the front of the bike are securely connected or certain components may not work including the front light, the motor inhibitor switches, the LCD display, and the . The motor inhibitor switches shut the motor off as soon as the rider hits the brakes. If these switches are not operational it will take longer to slow down which in some riding situations could cause injury or death to the rider. If you have installed any accessories make sure they do not interfere with all cables and connectors when turning the handlebars.

ERROR CODES

Error Code	Meaning
6	Battery Undervoltage
7	Motor fault
9	Controller failure
10	Communication reception failure
11	Communication transmission failure

WARRANTY

All Bikes should be operated in accordance with the ONESPORT owner's manual provided with the bike. ONESPORT warrants to the original registered purchaser that bikes shall be free from all defects in material and workmanship for a period of 12 months from the date of shipment when used in accordance with the owner's manual and for the purpose intended. All other obligations and conditions or liabilities, including obligations for consequential damages, are hereby excluded.
The warranty is non-transferable and only applies to the original owner.
This warranty gives you specific rights and purchasers may also have other rights, which may vary by location. Damage caused by failing to adhere to instructions and warnings issued by ONESPORT is not covered under warranty. Warranty parts will only be shipped within the continental EU. The warranty period for parts is as follows.

The warranty time is calculated from the date of the sale.

	Accessories	Warranty Period	Warranty Type
Electrical parts	Motor	12 months	Free repair of failure within one year
	Controller	12 months	Performance failure
	Battery	12 months	Can't charge and discharge
	Charger	12 months	Performance failure
	Display	12 months	Malfunction
	Tail Light	12 months	Malfunction
	Sensors	12 months	Malfunction
	E-Controls	12 months	Malfunction
Structure	Frame	24 months	There is natural welding. desoldering, and fracture phenomena
	Front fork	12 months	
	Stem	24 months	
	Handlebar	24 months	
	Rear Rack	24 months	

Accessories sold on www.onesportglobal.com are not covered under warranty (except in cases of shipping damages). Stolen bikes are not covered under warranty.

Necessary precautions must be taken to ensure the bike and battery are not exposed to severe weather conditions.

Exposure to very wet, hot, or cold conditions may void the warranty.

We will replace any parts deemed to have been damaged during shipping. Shipping damage must be reported to ONESPORTwithin 14 days of shipment arrival. This applies to all products including bikes and accessories. You will NOT be refunded as compensation for your time or efforts in replacing damaged parts. Replacement parts will not be sent until photographic evidence has been provided to ONESPORT. ONESPORT may request additional documentation (such as video) to assist with accurately diagnosing the problem and processing the warranty claim. Most warranty parts are fulfilled 1-10 business days after the request is put into our system by a customer service representative. Warranty parts are sent using UPS First Class, FedEx Express, or DHL depending on the size of the part. Warranty parts will not be expedited. items including the chain, tires, wheels, tubes, battery handle, brake pads, cables and housing, grips, and spokes are considered wear items.

These items wear down with normal use and are not covered under warranty. You are responsible for replacing and maintaining these worn items. Any unauthorized alterations or repairs are not covered and may avoid this warranty. For warranty services, please contact ONESPORT online support by email at support@onesportglobal.com. Bikes or parts returned without proper documentation may result in delayed service or denied warranty coverage. Warranty return shipping costs along with duties and taxes are the responsibility of the claimant.

ELECTRIC BIKE MAUNTENANCE

REGULAR CLEANING

Cleaning the bike often will help to keep dirt, dust, and debris from getting into the engine and messing with the motor. It also helps to keep all the mechanical parts moving properly without grinding against each other or blocking the chain. E-bikes should be washed once or twice per week.

When you clean your e-bike, do not use a pressurized hose or stream of water. This might compromise the integrity of the meals around electrical equipment and wear them down, eventually leading to exposed and wet electrical systems that will then malfunction. Instead, use a low-pressure water stream or a wet rag and dry the bike off once you're washing it.

LUBRICATION

In order to keep all the mechanics in working order, you can apply lubrication on the major moving parts such as the chain. You should use a special cleaning solution to clean off the chain before applying a bike lubricant to it. This should ideally be done at least once a week if you use the bike often.

CHECK THE BOLTS

Do a quick once-over and check for any loose screws, bolts, nuts, or anything else on the bike. If there is too much play in the bolts, tighten them up a little bit and see if you can identify the cause of the looseness. Don't tighten the bolts too far.

TIRE PRESSURE

You can check to see what the current pressure is in the tires by using a simple pressure gauge. If it s too low, or if the tires can visibly sink when you push your finger into them, you should get out your bike pump and inflate them properly to the pressure indicated on the tires.

BRAKE PADS

Take a good look at the brake pads on your bike every few weeks to see how they are holding up. it's essential that you have effective brakes or else you could end up in a serious accident. Brake pads can easily and cheaply be replaced whenever necessary.

WATERPROOFING

The battery and motor of an e-bike are well-sealed to prevent any water damage. That doesn't mean it's absolutely impossible for water to get in, but with a certain level of common sense and care, you won't need to worry. Things to avoid with an electric bike include using a jet wash and fully submerging the bike. No lake jumps then, sorry! The motor itself is in a factory-sealed unit and you should never attempt to take it apart for maintenance or to try and fix a problem.

BATTERY CARE

Charge the battery at room temperature in a dry location. To improve the life span of your battery, avoid leaving the battery fully charged or fully discharged for long periods of time. When the bike is out of use for an extended period, you can disconnect the battery.It will gradually lose charge, so still, top it up every now and again. As we've already said, avoid storing the bike for long periods of time with no charge - maintaining a 30 to 60 percent charge is ideal for long-term storage, according to e-bike systems manufacturers. Extreme heat and cold are the enemies of electric bike batteries. Store your e-bike battery in a cool, dry place out of direct sunlight. During winter, and particularly if the temperature is below 0°C, charge and store the battery at room temperature, and re-insert the battery into the bike immediately before riding.

DISCLAIMER

Riding any kind of bicycle comes with inherent risks and dangers that cannot be predicted or avoided. These dangers could result in a serious accident, injury, or death of the rider. it is the sole responsibility of the rider to become properly educated and prepared to ride safely. Once in possession of the bike, ONESPORT strongly encourages and recommends that all customers have a certified and reputable bicycle mechanic complete a full inspection of each component on the bicycle to ensure it's safe for operation. ONESPORT makes no claims or guarantees that the brakes, battery, frame, motor, motor controller, LCD display, electrical cables, electrical cable housings, fasteners, grips, fork, stem, shifters, headset, seat post, seat post clamp, handlebar stem clamp, saddle, wheel hubs, handlebars, spokes, rims, tires, tubes, derailleur, freewheel, cassette, , kickstand, lights, reflectors, hardware, bottom bracket, or any other part or accessory, will be properly secured and adjusted upon arrival. Before every ride fully inspects your bicycle to ensure everything is secured and adjusted properly. Under no circumstances is ONESPORT responsible for any damage resulting from damaged, defective, or improperly secured parts. This includes but is not limited to, damage to personal property, personal injury, or death.

Tiktok

Instagram

Pinterest

YouTube

WhatsApp